Design and features of “New Locknut”

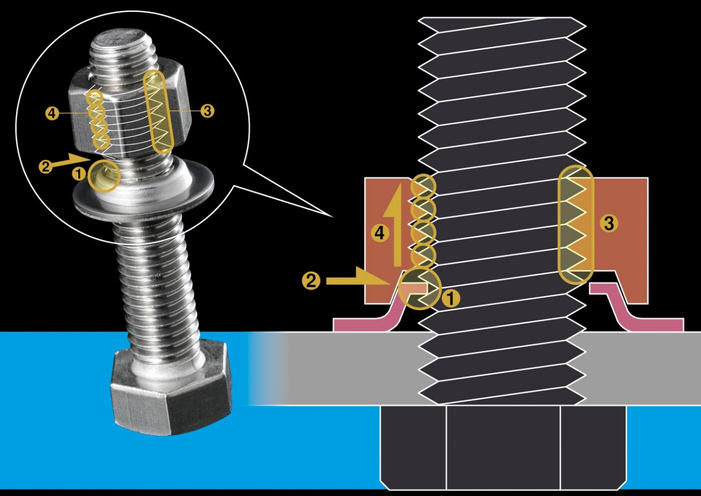

❶ Bite

By tightening the concave washer, it will bite into the bolt.

❷ Wedge effect

A wedge effect is generated due to the interaction between the washer and the nut.

❸ Loosening prevention effect

As a result, one side of the threading is pressed and secured against the nut.

❹ Locking effect

The contact between the nut and the screw is increased to generate more bonding strength (locking effect).

Tightening torque force reference list (for materials of the specific composition)

○The values in the following table are to be used as references only.

Example of combination

○Please adjust torque accordingly when securing to unusual, uneven or slippery surfaces. Please also adequately adjust the torque wrench settings during installation.

Surface treatment and material	Nominal diameter (d)	Concave nut <Unit: mm>				Conical washer <Unit: mm>			Reference tightening torque force <Unit: N·m> (Min-Max)
		Pitch (p)	Design dimension (s)	Design dimension (e)	Design dimension (h)	Outer diameter (D)	Inner diameter (d)	Thickness (t)	
<Surface treatment> HDZ: Hot-Dip Galvanized <Material> Washer Material: SAE1060 or equivalent Nut Material: SWCH10R or equivalent	M8	1.25	13.0	15.0	8.0	17.0	8.30	1.20	23 (19 ~ 27)
	M10	1.50	17.0	19.6	10.0	21.0	10.30	1.40	48 (40 ~ 56)
	M12	1.75	19.0	21.9	12.0	24.0	12.30	1.50	71 (59 ~ 83)
	M16	2.00	24.0	27.7	16.0	30.0	16.30	2.00	229 (176 ~ 282)
	M20	2.50	30.0	34.6	20.0	37.0	20.30	2.50	306 (235 ~ 377)
	M22	2.50	32.0	37.0	22.0	39.0	22.30	2.50	325 (250 ~ 400)
	M24	3.00	36.0	41.6	24.0	44.0	24.40	3.00	585 (450 ~ 720)
	M30	3.50	46.0	53.1	30.0	56.0	30.40	3.20	1040 (800 ~ 1280)
<Surface treatment> Trivalent: Trivalent Chromate <Material> Washer Material: SAE1060 or equivalent Nut Material: SWCH10R or equivalent	M8	1.25	13.0	15.0	8.0	17.0	8.10	1.20	21 (17 ~ 25)
	M10	1.50	17.0	19.6	10.0	21.0	10.10	1.40	39 (32 ~ 45)
	M12	1.75	19.0	21.9	12.0	24.0	12.10	1.50	57 (47 ~ 67)
	M16	2.00	24.0	27.7	16.0	30.0	16.10	2.00	134 (103 ~ 165)
	M20	2.50	30.0	34.6	20.0	37.0	20.10	2.50	229 (176 ~ 282)
SUS: Stainless steel <Material> Washer Material: SUS304 or equivalent Nut Material: SUS304 or equivalent	M6	1.00	10.0	11.5	6.0	12.0	6.05	1.00	8 (6 ~ 10)
	M8	1.25	13.0	15.0	8.0	17.0	8.10	1.20	17 (13 ~ 21)
	M10	1.50	17.0	19.6	10.0	21.0	10.10	1.40	33 (25 ~ 41)
	M12	1.75	19.0	21.9	12.0	24.0	12.10	1.50	46 (35 ~ 57)

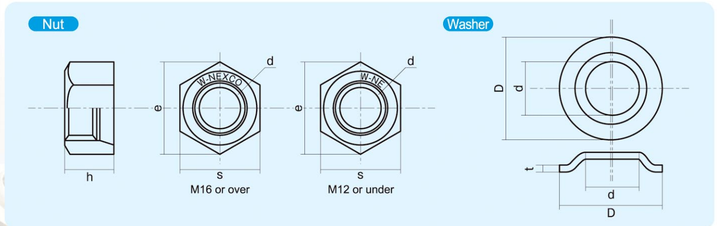

By tightening at the proper torque setting, “New Locknut” delivers a powerful locking effect. Tightening too loosely or too much may result in the elongation and fracture of the screws.

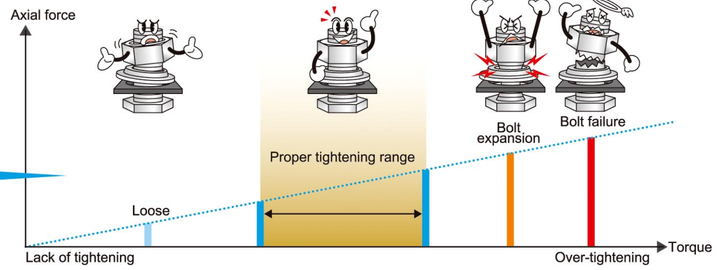

Torque force is affected by washer or screw’ s frictional properties. Under the small friction force, the axial force that applies to the bolt becomes too strong even if the bolt is tightened at the proper torque force.

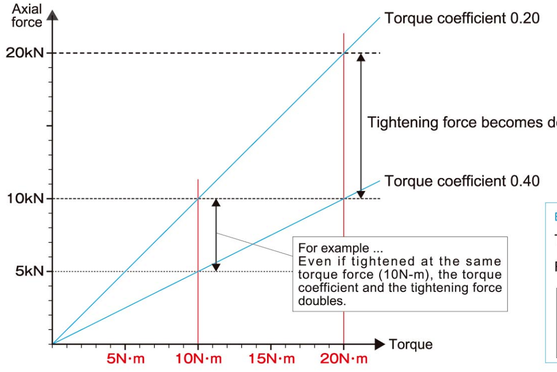

Equation of torque and axial force

$$T = K \times d \times Ff$$

$$Ff = \frac{T}{K \times d}$$

T : Tightening torque (N·m)
K : Torque coefficient
Ff: Axial force
d : Nominal diameter of the bolt (mm)

Caution

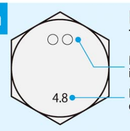

Please use the JIS strength class 4.8 or higher!
The following information is provided at the bolt head:

Manufacturer identification number

Product strength classification

<Example: strength class 4.8 bolt>
The first number 4 means the bolt’ s tensile strength is 400N / m²
The second number 8 shows that the value of 80% of the 400N / m² (320N / mm2) is the yielding point.